A linear-in-dB-control variable gain amplifier using a new approach

M.S. Altuner[1], H.G. Momen[1], Metin Yazgi[1], A. Toker[1] and A. Zeki[2]

[1] Istanbul Technical University, Faculty of Electrical and Electronics Engineering, Department of Electronics and Communication Eng., 34469, Maslak, İstanbul, Turkey
msaltuner@itu.edu.tr, momen@itu.edu.tr, yazgim@itu.edu.tr, tokeral@itu.edu.tr
[2]Girne American University, Department of Electrical and Electronics Engineering, University Drive, Girne, Mersin 10, Turkey
alizeki@gau.edu.tr

Abstract

In this paper, a new technique for obtaining the pseudo-exponential function is presented. Then, a new pseudo-exponential function employing the new technique is described and a new CMOS exponential-control variable gain amplifier (VGA) based on the new function is introduced. No multiplier is needed in the proposed approach. The VGA operates in current mode and includes two different stages. The first stage is a simple current amplifier while the second stage is an attenuator which has the pseudo-exponential control employing the new technique. The overall behavior of the stages gives the new pseudo-exponential function. The VGA circuit has been designed and simulated for a 0.35□ CMOS process. The circuit has a bandwidth of 300MHz and a gain range of 32dB between -16dB and +16dB.

1. Introduction

Automatic gain control (AGC) is required to maximize the dynamic range of most wireless communication systems as well as disk drives, medical equipment and so on. The variable gain amplifier (VGA) is the most important part of an AGC loop. AGC provides constant signal level by means of the VGA [1-11].

There are two different techniques for VGA building. One employs a number of gain stages and the gain is discrete and digitally controlled. Therefore, this type of VGA can be called programmable gain amplifier (PGA) [4]. The other employs a continuous amplifier and an analog gain control signal [1-3, 5-11]. Analog gain control is generally preferred because discrete gain control may cause some problems such as phase discontinuity [4].

Various technologies can be used for the VGA realization. However, the low cost and easy integration have caused CMOS VGAs to be preferred. The gain of a VGA is generally required to be an exponential function of a control signal. The exponential gain control can be easily obtained in bipolar transistor technology by means of the inherent exponential characteristics. However, CMOS technologies do not give exponential characteristics except in weak inversion region however the weak inversion is suitable only for low-frequency applications [9]. To realize the exponential function in strong inversion region several approaches have been presented in the literature. One of the widely used approaches is utilization of the pseudo-exponential function [1, 2, 3, 5, 6, 8, 10]. In this paper, a new technique for obtaining the pseudo-exponential function is presented. Then, a new pseudo-exponential function employing the new technique is described and a new CMOS exponential-control variable gain amplifier (VGA) based on the new function is introduced.

2. The New Technique

In order to obtain exponential control in a CMOS-VGA, one of the approaches is utilization of the pseudo-exponential function [1, 2, 3, 5, 6, 8, 10]. In this approach, the mathematical approximation below is used

$$\left(\frac{1+k}{1-k}\right)^n \approx e^{2nk} \tag{1}$$

When n=1, under the condition of a maximum detour of 1dB, the approximation is valid for $|k| < 0.53$. In that case, the linear-in-dB-gain range is obtained as ±10dB. If the pseudo-exponential approach is applied to a current mode VGA circuit, the relationship between the input and output currents is as follows:

$$I_o = I_{in}\frac{1+k}{1-k} \tag{2}$$

We can rearrange this expression in order to obtain the relationship between the sum and the difference of the input and output currents:

$$(I_o - I_{in}) = k(I_o + I_{in}) \tag{3}$$

This expression gives a new technique for obtaining the pseudo-exponential gain control. In the new technique, it is aimed to obtain Equation (3) with the help of feedback loops. The presented technique can be applied by using the circuit in Fig.1. From the circuit analysis (4) is obtained.

$$I_o = G_m\left[(I_o - I_{in})R_2 - (I_o + I_{in})R_1\right] \tag{4}$$

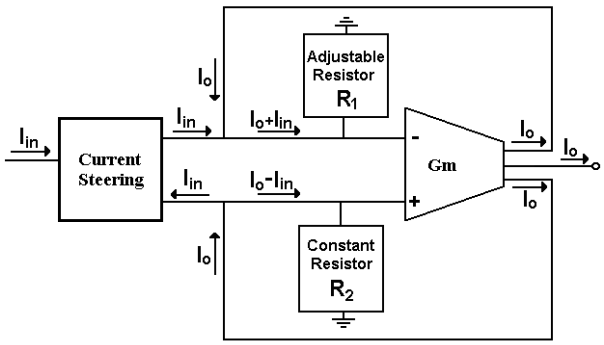

Fig.1. A circuit realizing the new approach

When this expression is rearranged under the condition of $G_m(R_1-R_2)>>1$, the result given below is obtained.

$$\frac{I_o}{I_{in}} \cong -\frac{G_m(R_1+R_2)}{G_m(R_1-R_2)} = -\frac{1+\frac{R_2}{R_1}}{1-\frac{R_2}{R_1}} \tag{5}$$

In (6), the ratio of R2/R1 corresponds to k in (2). When R1 and R2 have close values, to satisfy the condition ($G_m(R_1-R_2)>>1$) necessitates a relatively high Gm. In order to obtain high Gm, multiple stages may be necessary in cascade. In that case, stability problems may occur in the circuit which includes two separate closed-loops. Another disadvantage of the circuit in Fig.1 is that it includes DC positive feedback. Therefore, the circuit may exhibit hysteresis behaviors.

It is possible to get rid of the problems mentioned above by using the inverted form of the exponential function. In that case, expression (1) and (2) change to (6a) and (6b) respectively.

$$\left(\frac{1-k}{1+k}\right)^n \approx e^{-2nk} \tag{6a}$$

$$I_O = I_{in}\frac{1-k}{1+k} \tag{6b}$$

Eq.(7b) is obtained for n=1. We can rearrange this expression in order to obtain the relationship between the sum and the difference of the input and output currents.

$$(I_{in}+I_o) = k(I_{in}-I_o) \tag{7}$$

Expression (8) can be approximately realized by using the circuit in Figure.2. From the analysis of the circuit

$$I_o = G_m\left[(I_{in}-I_o)R_2-(I_{in}+I_o)R_1\right] \tag{8}$$

is obtained. When this expression is rearranged under the condition of Gm(R1+R2)>>1 the result given below is obtained.

$$\frac{I_o}{I_{in}} \cong -\frac{G_m(R_1-R_2)}{G_m(R_1+R_2)} = -\frac{1-\frac{R_2}{R_1}}{1+\frac{R_2}{R_1}} \tag{9}$$

In (9), the ratio of R2/R1 corresponds to k in (6b). To get the condition (Gm(R1+R2)>>1) does not necessitate a high Gm value, since the sum (R1+R2) is great relatively. Therefore, extra stages are not necessary in cascade. Thus, stability problems are unlikely to appear in the circuit. Another advantage of the modified case of the new approach is that it does not include DC positive feedback (both feedbacks are negative).

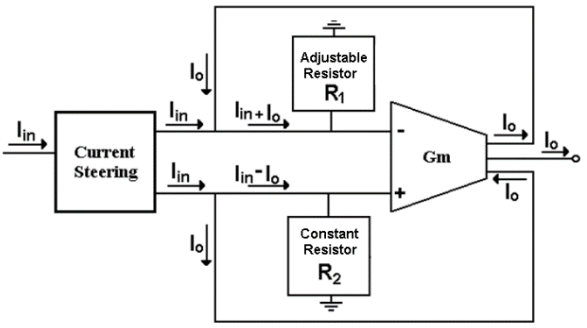

Fig.2. Schematic of the new approach for the inverted form of the pseudo-exponential function

If R2 or R1 has a negative value, the circuit in Figure.2 cannot get rid of DC positive feedback problem. In addition to that, stability problems may occur. As a result, the ratio R2/R1 (k) should be only positive. In that case, Eq.(7) can provide only attenuation for the circuit in Figure.2. Thus, the circuit in Figure.2 can be considered as an attenuator circuit.

2. The New Function

Although the attenuator circuit in Figure.2 has important advantages when compared to the amplifier circuit in Figure.1, to provide only attenuation is disadvantageous for VGA applications. In this work, in order to solve this problem, a new pseudo-exponential function is presented as:

$$\frac{1}{k}\frac{1-k}{1+k} \approx 9e^{-5.2k} \qquad 0.17<k<0.85 \tag{10}$$

Here, the range $0.17 < k < 0.85$ is given for a maximum detour of 1dB. Note that the range of k is obtained in a positive interval. In the interval, the linear-in-dB-gain is obtained between -20dB and 12dB.

In Eq. (10), the second term comes from the attenuator application. The first term 1/k adds the gain effect to the overall behavior besides improvement on the linear-in-dB performance. Figure.3 shows the variation of the new pseudo-exponential function together with the variations of the exponential function, the attenuation term and the gain term 1/k. As seen from the figure, a linear-in-dB-gain range of ~32dB (between -20dB and 12dB) can be obtained by using the new function.

We can use the attenuator circuit given in Fig.2 in order to get the second term. The missing part of the new function is the first term 1/ k, which is >1 for 0<k<1. One method to complete the new function is that a current amplifier having the first term 1/ k can be used at the input of the attenuator in cascade.

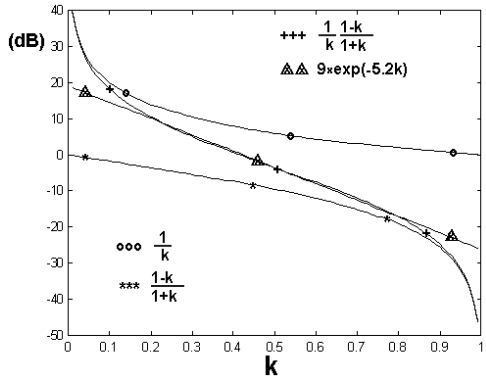

Fig.3. The new pseudo-exponential function and the related functions.

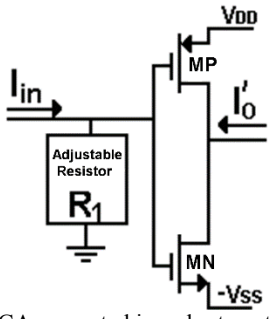

Fig.4. The pre-VGA presented in order to get the first term 1/k in the function.

3. The New VGA Circuit

In order to obtain the first term (1/k) of the new function, the circuit in Fig.4 can be used at the input of the attenuator in cascade. The important point in this method is that the control signals of the adjustable resistors in the attenuator and pre-VGA should be the same. The current gain of the pre-VGA can be given as:

$$\frac{I_o^{/}}{I_{in}} = (g_{mn} + g_{mp})R_1 \qquad (11)$$

Where $g_{mn} = \beta_n (V_{GSn} - V_{THn})$ and $g_{mp} = \beta_p (V_{GSp} - V_{THp})$

Here, gmn and gmp are ac transconductances of the N-type and P-type transistors of pre-VGA. β_n is $\mu_n C_{ox} W_n / L_n$ and β_p is $\mu_p C_{ox} W_p / L_p$. V_{THn} and V_{THp} are the threshold voltages.

The circuit given in Fig.5 can be used as the adjustable resistor R_1 of the attenuator and the pre-VGA [12]. The same circuit is used for the constant resistor of the attenuator R_2 by reducing the control voltage (VC) to zero.

By assuming MN1 and MN2 matched (βN1= βN2 =β), the resistance of the voltage controlled resistor can be given as [12].

$$R = f(V_C) = \frac{1}{2\beta(V_{DD} - V_{TH} - V_C)} \qquad (12)$$

Figure.6 shows the whole structure of the VGA. The circuit given in Figure.7 can be used as the Gm circuit of the attenuator.

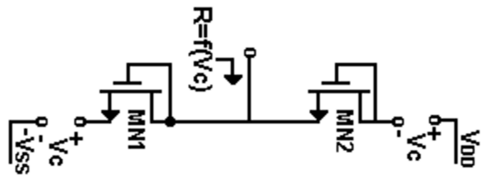

Fig.5. A circuit for the voltage controlled resistor R_1 [12]

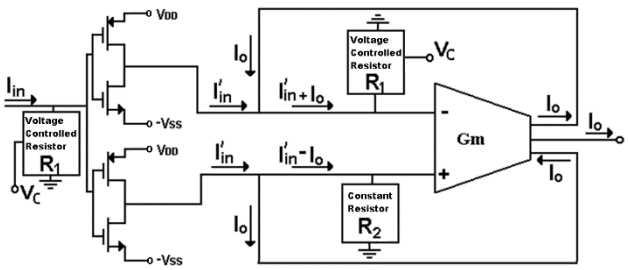

Fig.6. The whole structure of the VGA

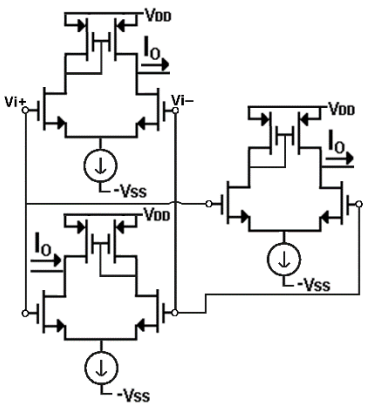

Fig.7. The G_m circuit used in the attenuator

The overall gain of the VGA can be obtained from (9), (11) and (12) as:

$$\frac{I_o}{I_{in}} = \left[\frac{\beta_n + \beta_p}{2\beta}\frac{V_{DD} - V_{TH}}{V_{DD} - V_{TH} - V_C}\right]\left[\frac{1 - \frac{V_{DD} - V_{TH} - V_C}{V_{DD} - V_{TH}}}{1 + \frac{V_{DD} - V_{TH} - V_C}{V_{DD} - V_{TH}}}\right] \qquad (13)$$

This equation gives the new pseudo-exponential function given at Eq. (10) for

$$k = \frac{V_{DD} - V_{TH} - V_C}{V_{DD} - V_{TH}} \qquad (14)$$

In Eq. (13), the first term comes from the pre-VGA while the second comes from the attenuator. The only difference between the two functions in Eqs. (10) and (13) is that Eq.(13) includes an extra coefficient (βn+ βp)/(2β). This extra term is an advantage in order to shift the gain range of the VGA. Furthermore, for βn+βp=1.8β and VDD-VTH=1V, Eq. (13) defines also a second function with VC as:

$$\frac{I_o}{I_{in}} = 1.8\frac{1}{1 - V_C}\frac{V_C}{2 - V_C} \approx 0.1x e^{5Vc} \qquad 0.18<V_C<0.81 \qquad (15)$$

In Eq. (15) the range is given for a maximum detour of 1dB. In that case, the linear-in-dB-gain range is obtained between -13dB and 16dB. Figure.8 shows the change of Eq. (15) versus VC.

4. Frequency response of the VGA

The transfer function Io /Iin of the attenuator has two poles which are real and negative. Thus, under the condition $G_m(R_1+R_2)>>1$, the pole frequencies of the attenuator circuit are obtained as:

$$f_{P1} \cong \frac{G_1 + G_2}{4\pi C_0} \quad , \quad f_{P2} \cong \frac{G_1 + G_2 + 4G_m}{4\pi C_0} \qquad (16)$$

Here, $G_1=1/R_1$, $G_2=1/R_2$ and C_0 is total parasitic capacitance at each of the OTA input-nodes. Under the condition ($G_m(R_1+R_2)>>1$), f_{p1} is dominant and gives the cut-off frequency of the attenuator. The parasitic output capacitances of the pre-VGA have been added to C_0. Therefore, the current gain function of the pre-VGA has one pole frequency which is given by

$$f_{Pi} \cong \frac{1}{2\pi R_1 C_i} \qquad (17)$$

Here, C_i is the total capacitance at the pre-VGA input-node. As seen from Eqs.(16) and (17), the minimum bandwidth is achieved when R_1 is maximum. R_1 is adjusted to take values

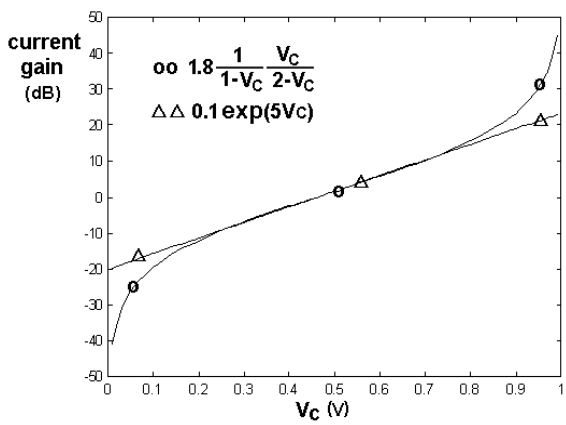

Fig.8. The variation of Eq.(17) versus V_C for $\beta_n+\beta_p=1.8\beta$ and $V_{DD}-V_{TH}=1V$

ranging from $R_2 \approx 4k\Omega$ to $7R_2 \approx 28k\Omega$ roughly (corresponding to k=0.98 to k=0.16 and V_C=0.02 to V_C=0.84 respectively for V_{DD}-$V_{TH} \cong$ 1V). Thus, the maximum and minimum values of the pole frequencies are approximately obtained as:

$$f_{P1} \approx \frac{1}{2\pi R_2 C_0} \xrightarrow{\text{increasing gain}} f_{P1} \approx \frac{1}{2} x \frac{1}{2\pi R_2 C_0} \quad (18a)$$

$$f_{Pi} \approx \frac{1}{2\pi R_2 C_i} \xrightarrow{\text{increasing gain}} f_{Pi} \approx \frac{1}{7} x \frac{1}{2\pi R_2 C_i} \quad (18b)$$

Here, as the gain increases the pole frequencies decrease. There is no great difference between the values of C_i and C_0. Thus, $C_i \approx C_0$ can be assumed in order to obtain the general bandwidth performance. For minimum gain ($R_1 \cong R_2$), the cut-off frequency of the VGA is determined by the close poles. For maximum gain ($R_1 \cong 7R_2$), the bandwidth has its minimum value and, f_{Pi} is more effective than f_{P1}. Finally, the cut-off frequency variation can be given as:

$$f_c \approx \frac{1}{1.5} \frac{1}{2\pi R_2 C_0} \xrightarrow{\text{increasing gain}} f_c \approx \frac{1}{8} \frac{1}{2\pi R_2 C_0} \quad (19)$$

5. Simulation Results

The VGA circuit (Fig.6) has been designed by using 0.35µ CMOS process. The circuit gives a gain range of 32dB (±16dB). The bandwidth performance changes between 1.7GHz and 0.3GHz. For a gain of 0dB, input and output current range can be given as ±15µA from the linearity point of view. In this range, the circuit exhibits a good linearity performance (THD<1.8%). The total power consumption is less than 3mW.

The transconductance value (G_m) of the G_m circuit has been determined as ~250µS during the design of the VGA circuit. In that case, the value of the term $G_m(R_1+R_2)$ varies between 5 and 8 which can be accepted enough for the condition ($G_m(R_1+R_2)$>>1).

Figure.9 shows DC response of the VGA. As seen from the figure, the DC gain varies between ~ -16dB (V_C =0.02V). and ~ 16dB (V_C=0.84V) for the input and output current limits of ±15µA. The figure reveals the linearity limits of the VGA.

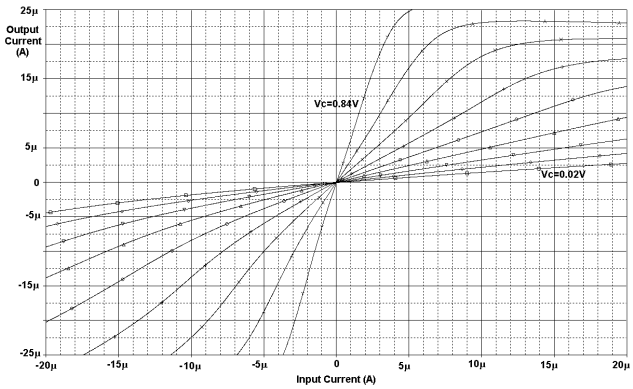

Fig.9. DC response of the VGA (V_{Cstep} =102.5mV).

Figure.10 shows frequency response of the VGA. As seen from the figure, there are peaks at the minimum gain levels because of secondary effects not taken into account in the frequency response analysis given above. However, when the peaks are not taken into account, the bandwidth can be accepted to change by a ratio in agreement with the frequency analysis (Eq.(21))

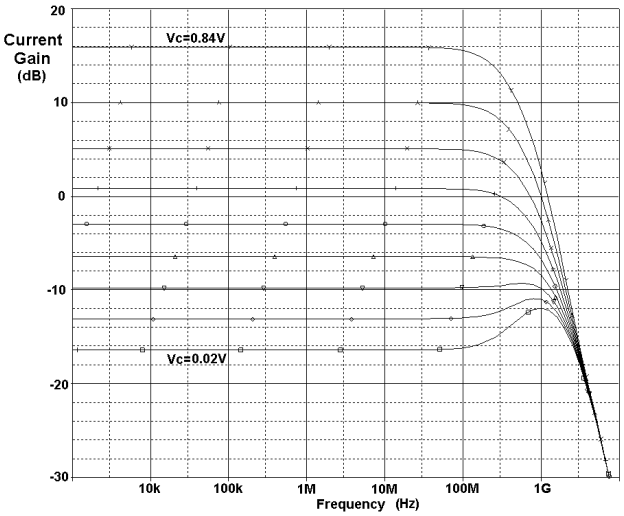

Fig.10. Frequency response of the VGA (V_{Cstep} =102.5mV)

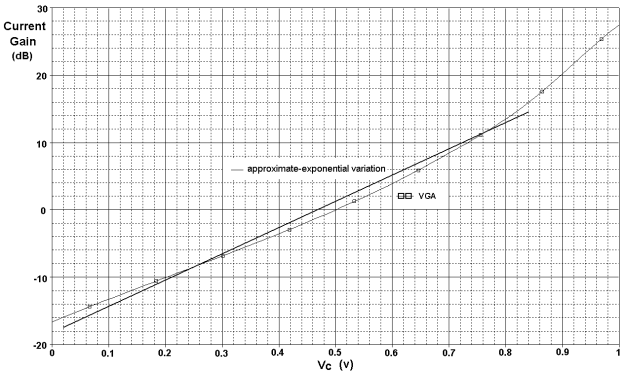

Fig.11. Current-gain of the VGA versus control voltage V_C

Figure.11 illustrates the current gain of the VGA versus control voltage V_C. $\beta_n+\beta_p=1.8\beta$ was preferred in the design of the VGA circuit. Moreover, V_{DD}-$V_{TH} \cong$ 1V was satisfied for the used V_{DD} value and the V_{TH} parameter value of the utilized process. Thus, Figure.11 and Figure.8 have been obtained under the same conditions in theory. However, there are some differences between Figure.11 and Figure.8 which can be explained with the VGA's secondary effects, such as the approximate fulfillment of condition ($G_m(R_1+R_2)$>>1) and the nonlinearities of the G_m circuit and the resistors R_1 and R_2. On the other hand, Fig.11 shows that a good linear-in-dB gain performance is obtained between the gain values of -16dB and 16dB for a maximum detour of 1.5dB (the overall gain range is 32dB).

Figure.12a and 12b give the time responses of the VGA for the frequencies 1kHz and 100MHz (the input signal is a sine wave of 2µA-amplitude). The VGA gives close performances of total harmonic distortion (THD) for both frequencies: between 0.58% and 1.8%. These characteristics show that the VGA circuit gives good linearity performance.

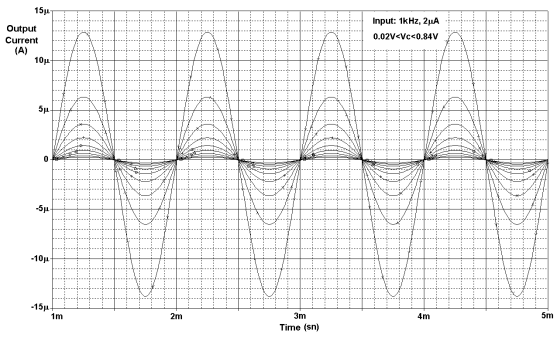

a)

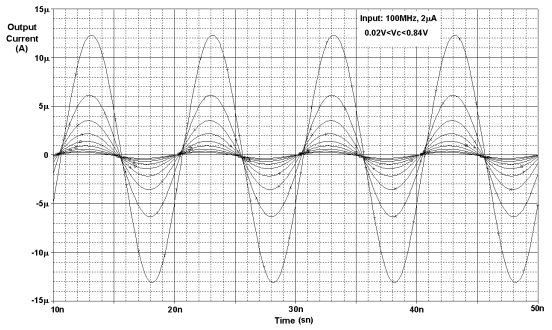

b)

Fig.12. Time response for different control voltages ($0.02V<V_C<0.84$) when the input signal is a sine wave having amplitude of 2μA: a) 1kHz b) 100MHz

Table.1. General Performances of the VGA

Input and Output Current Range (for gain=0dB)	-15μA ⇔ +15μA
Gain Range	-16dB ⇔ +16dB
Bandwidth	1.7GHz ⇔ 300MHz
Average Power Cons.	<3mW
THD (f=1kHz)	1.8% (I_{OPP}=26μA)
THD (f=100MHz)	1.7% (I_{OPP}=26μA)

6. Conclusion

In this paper, a new pseudo exponential function has been presented. The function also includes a new technique for obtaining the conventional pseudo-exponential function. The gain range of the new function for a maximum detour of 1dB is 32dB while the gain range of the conventional pseudo-exponential function is 20dB. Another advantage of the new function is that the control voltage varies in a positive interval. Based on the new exponential function, a new current-mode variable gain amplifier has been proposed in this paper. The circuit has a simple structure not including multiplier and employs a current amplifier and an attenuator, implemented accordingly to fulfill the requirements of the proposed function and the VGA. The new circuit was designed using CMOS 0.35μ process and gives a bandwidth of 300MHz with a 32dB gain range.

7. References

[1] Harjani, R., ”A low-power CMOS VGA for 50-Mb/s disk drive read channels”, IEEE Trans. Circuits Syst. II, Analog Digit. Signal Process., vol 42., no 6, pp. 370-376, June 1995

[2] Motamed, A., Hwang, C. and Ismail, M., “A low voltage low power wide range CMOS VGA”, IEEE Trans. on Circuits and Systems II, vol. 45, pp. 800-811, July 1998

[3] Green, M. and Joshi, S., “A 1.5V CMOS VGA based on pseudo-differential structures”, IEEE International Symposium on Circuits and Systems, Geneva, Switzerland, pp. 441-446, 2000.

[4] Elwan, H.O. and Ismail, M., “Digitally programmable decibel-linear CMOS VGA for low-power mixed-signal applications”, IEEE Trans. Circuits Syst. II, Analog Digit. Signal Process., vol. 47, no. 5, pp. 388-398, Jan. 2000

[5] Abdelfattah, K.M. and Soliman, A.M., “A new approach to realize variable gain amplifiers”, Analog Integrated Circuits and Signal Processing, Vol. 30, pp. 257-263, 2002.

[6] Saito, R., Hosoda, K., Hyoqo, A., Maruyama, T., Komuraki, H., Sato, H. and Sekine, K., “A 1.8-V 73-dB dynamic-range CMOS variable gain amplifier”, Solid State Conference 2003, ESSCIRC’03, Proceedings of the 29th European, pp. 301-304, Sept. 2003

[7] Kwon, J.K., Kim, K.D., Song, W.C. and Cho, G.H.,”Wideband high dynamic range CMOS variable gain amplifier for low voltage and low power wireless applications.” Electron Lett., vol. 39, no. 10, pp. 759-760, 2003

[8] Liu, W., Liu, S.-I. and Wei, S.-K., “CMOS exponential-control variable gain amplifiers”, IEE Proc.-Circuits Devices Syst., Vol. 151, No.2, pp. 83-86, April 2004.

[9] Liu, W. and Liu, S.-I., “Low voltage and low power CMOS exponential-control variable gain amplifiers”, IEICE Trans. Fundamentals, Vol. E87, No.4, pp. 952-954, April 2004.

[10] Cha, S., Hirose, T., Haruoka, M., Matsuoka, T. and Taniguchi, K., “ACMOS IF variable gain amplifier with exponential gain control”, IEICE Trans. Fundamentals, Vol. E88, No.2, pp. 410-414, February 2005.

[11] Lee, H.D., Lee, K.A.and Hong, S., “A wideband CMOS variable gain amplifier with an exponential gain control”, IEEE Trans. On Microwave Theory and Techniques, vol. 55, no. 6, June 2007

[12] Wang, Z., “2-MOSFET Transresistor with extremely low distortion for output reaching supply voltages”, IEEE Trans. On Microwave Theory and Techniques, vol. 55, no. 6, June 2007